Features

- Low power consumption
- Low voltage drop
- Low temperature coefficient
- Low Quiescent Current: 5uA at 6V
- Output voltage accuracy: tolerance ±2%

Applications

- Battery-powered equipment
- Reference voltage sources
- Cameras, video cameras
- Portable AV systems
- Mobile phones
- Portable games

General Description

ASPL6216 series are a highly precise, lower consumption, 3 terminal, positive voltage regulators manufactured using CMOS and laser trimming technologies. The series provides large currents with a significantly small dropout voltage .

The ASPL6216 consists of a current limiter circuit, a driver transistor, a precision reference voltage and an error correction circuit. The series is compatible with low ESR ceramic capacitors. The current limiter's foldback circuit operates as a short circuit protection as well as the output current limiter for the output pin. Output voltages are internally by laser trimming technologies. It is selectable in 0.1V increments within a range of 1.2V to 3.6V. ASPL6216 series are available in SOT-23 、SOT23-3and SOT-89 packages.

Block Diagram

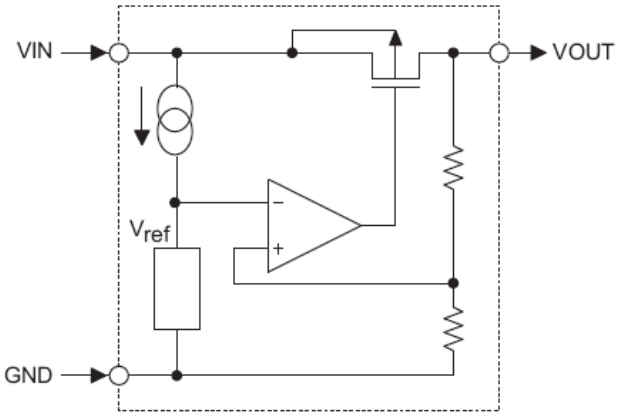

Pin Assignment

SOT23 and SOT23-3 (Top View)

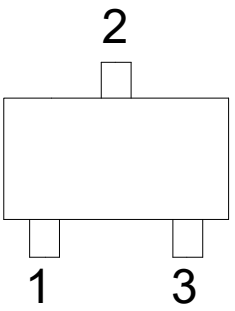

Table1: ASPL6216(SOT23/SOT23-3 PKG)

PIN NO.	PIN NAME	FUNCTION
1	GND	GND pin
2	VIN	Input voltage pin
3	VOUT	Output voltage pin

SOT89 (Top View)

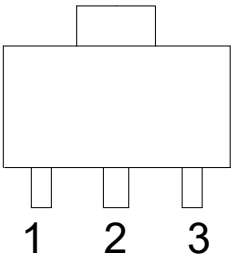

Table2: ASPL6216 (SOT89 PKG)

PIN NO.	PIN NAME	FUNCTION
1	GND	GND pin
2	VIN	Input voltage pin
3	VOUT	Output voltage pin

Part No.	Output Voltage	Package
ASPL6216-15	1.5V	SOT23-3 SOT23 SOT89
ASPL6216-18	1.8V	
ASPL6216-25	2.5V	
ASPL6216-28	2.8V	
ASPL6216-30	3.0V	
ASPL6216-33	3.3V	
ASPL6216-36	3.6V	

Absolute Maximum Ratings

Parameter		Symbol	Ratings	Units
Input Voltage		V_{IN}	8	V
Output Current		I_{OUT}	300*	mA
Output Voltage		V_{OUT}	V_{SS}-0.3~V_{IN}+0.3	V
Power Dissipation	SOT-23	P_d	0.20	W
	SOT23-3		0.25	W
	SOT-89		0.50	W
Operating Temperature Range		T_{opr}	-40~+85	℃
Storage Temperature Range		T_{stg}	-55~+125	℃

*$I_{OUT}=P_d/(V_{IN}-V_{OUT})$

Electrical Characteristics

（Ta=25℃）

Parameter	Symbol	Conditions	Min.	Typ.	Max.	Unit
Output Voltage	Vout	Vin=Vout+1V 1.0mA≤Iout≤30mA	Vout×0.98	--	Vout×1.02	V
Output Current*1	Iout	Vin-Vout=1V	--	300	--	mA
Low dropout*2	Vdrop	Refer to the next table				
Line Regulation	△ Vout1/(Vin·Vout)	1.6V≤Vin≤8V Iout=40mA	--	0.05	0.2	%/V
Load Regulation	△ Vout /ΔIout	Vin= Vout+1V 1.0mA≤Iout≤80mA	--	12	30	mV
Output voltage Temperature coefficiency	△ Vout/(Ta·Vout)	Iout=30mA 0℃≤Ta≤70℃	--	±100	--	Ppm/℃
Supply Current	Iss	Vin=6V	--	5	10	uA
Input Voltage	Vin	--	--	6	8	V
PSRR	PSRR	F=1KHz Vin=Vout+1V	--	50	--	dB

Electrical Characteristics by Output Voltage：

Output Voltage Vout(V)	Dropout Voltage Vdif（V）		
	Conditions	Typ.	Max.
Vout≤1.5V	Iout=100 mA	0.50	0.68
1.8 ≤ Vout ≤ 2		0.39	0.53
2.8 ≤ Vout ≤ 5.0		0.23	0.39

Ordering and Marking Information

Device	Marking	Package	Packaging	Quantity	Reel Size	Tape width
ASPL6216XXZB-R	6216XX	SOT23-3	Tape&Reel	3000/Reel	-	-
ASPL6216XXZA-R	6216XX	SOT23	Tape&Reel	3000/Reel	-	-
ASPL6216XXDI-R	6216XX	SOT89	Tape&Reel	1000/Reel	-	-

PACKAGE	MARKING
SOT23 SOT23-3 SOT89	6216XX

Package Information

3-pin SOT23 Outline Dimensions

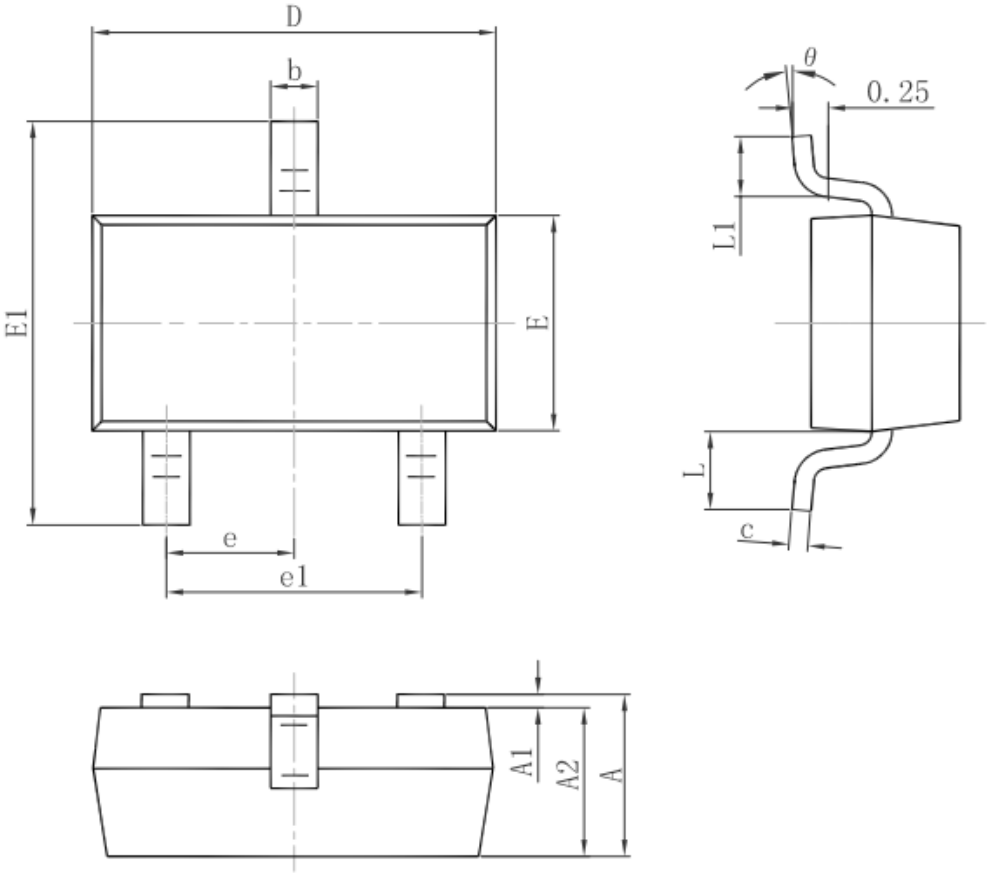

Symbol	Dimensions In Millimeters		Dimensions In Inches	
	Min.	Max.	Min.	Max.
A	0.900	1.150	0.035	0.045
A1	0.000	0.100	0.000	0.004
A2	0.900	1.050	0.035	0.041
b	0.300	0.500	0.012	0.020
c	0.080	0.150	0.003	0.006
D	2.800	3.000	0.110	0.118
E	1.200	1.400	0.047	0.055
E1	2.250	2.550	0.089	0.100
e	0.950 TYP.		0.037 TYP.	
e1	1.800	2.000	0.071	0.079
L	0.550 REF.		0.022 REF.	
L1	0.300	0.500	0.012	0.020
θ	0°	8°	0°	8°

3-pin SOT23-3 Outline Dimensions

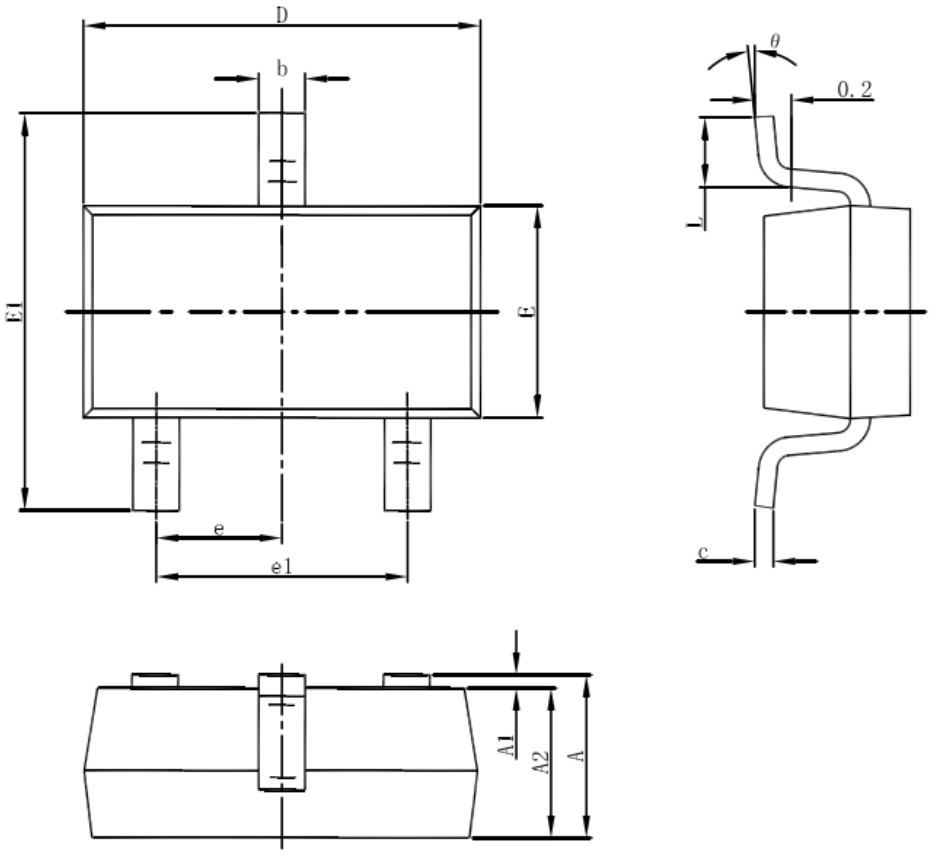

Symbol	Dimensions In Millimeters		Dimensions In Inches	
	Min	Max	Min	Max
A	1.050	1.250	0.041	0.049
A1	0.000	0.100	0.000	0.004
A2	1.050	1.150	0.041	0.045
b	0.300	0.500	0.012	0.020
c	0.100	0.200	0.004	0.008
D	2.820	3.020	0.111	0.119
E	1.500	1.700	0.059	0.067
E1	2.650	2.950	0.104	0.116
e	0.950(BSC)		0.037(BSC)	
e1	1.800	2.000	0.071	0.079
L	0.300	0.600	0.012	0.024
θ	0°	8°	0°	8°

3-pin SOT89 Outline Dimensions

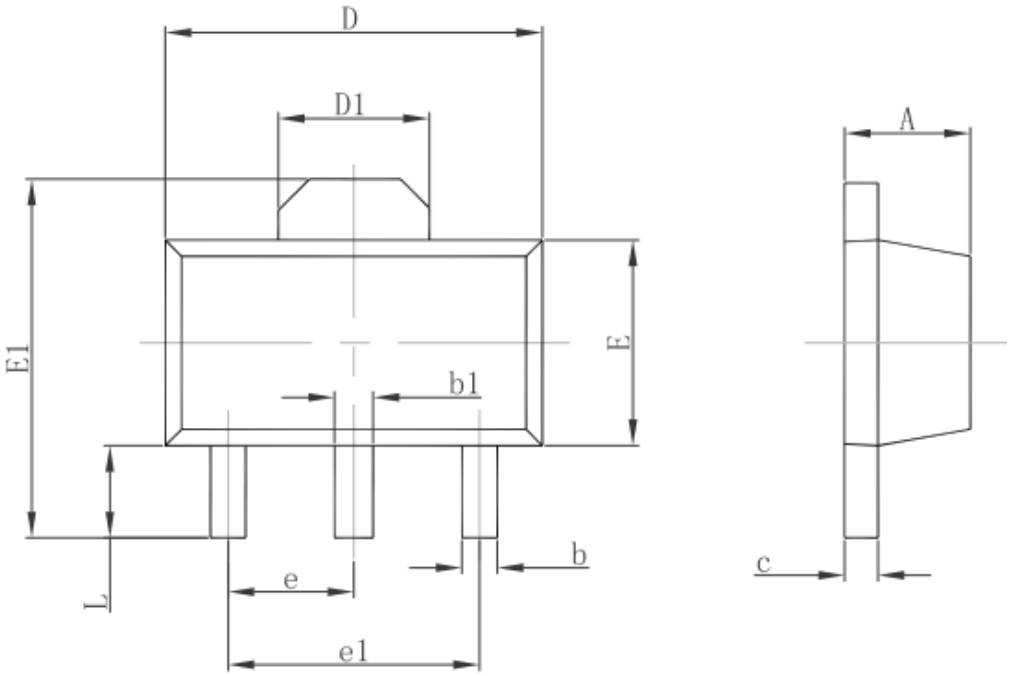

Symbol	Dimensions In Millimeters		Dimensions In Inches	
	Min.	Max.	Min.	Max.
A	1.400	1.600	0.055	0.063
b	0.320	0.520	0.013	0.020
b1	0.400	0.580	0.016	0.023
c	0.350	0.440	0.014	0.017
D	4.400	4.600	0.173	0.181
D1	1.550 REF.		0.061 REF.	
E	2.300	2.600	0.091	0.102
E1	3.940	4.250	0.155	0.167
e	1.500 TYP.		0.060 TYP.	
e1	3.000 TYP.		0.118 TYP.	
L	0.900	1.200	0.035	0.047

IMPORTANT NOTICE

Xi'an Ascend Semiconductor incorporated MAKES NO WARRANTY OF ANY KIND, EXPRESS OR IMPLIED, WITH REGARDS TO THIS DOCUMENT, INCLUDING, BUT NOT LIMITED TO, THE IMPLIED WARRANTIES OF MERCHANTABILITY AND FITNESS FOR A PARTICULAR PURPOSE (AND THEIR EQUIVALENTS UNDER THE LAWS OF ANY JURISDICTION).

Xi'an Ascend Semiconductor Incorporated and its subsidiaries reserve the right to make modifications, enhancements, improvements, corrections or other changes without further notice to this document and any product described herein. Xi'an Ascend Semiconductor Incorporated does not assume any liability arising out of the application or use of this document or any product described herein; neither does Xi'an Ascend Semiconductor Incorporated convey any license under its patent or trademark rights, nor the rights of others. Any Customer or user of this document or products described herein in such applications shall assume .

all risks of such use and will agree to hold Ascendsemi Incorporated and all the companies whose products are represented on Xi'an Ascend Semiconductor Incorporated website, harmless against all damages.

Xi'an Ascend Semiconductor Incorporated does not warrant or accept any liability whatsoever in respect of any products purchased through unauthorized sales channel. Should Customers purchase or use Xi'an Ascend Semiconductor Incorporated products for any unintended or unauthorized application, Customers shall indemnify and hold Xi'an Ascend Semiconductor Incorporated and its representatives harmless against all claims, damages, expenses, and attorney fees arising out of, directly or indirectly, any claim of personal injury or death associated with such unintended or unauthorized application.

www.ascendsemi.com